MFH 200 and MFH 300 MICROMASTER		
OVERLAY D03 FRONT MOUNT BONDED		
GLASS DOOR TO NON GLASS FRAME		

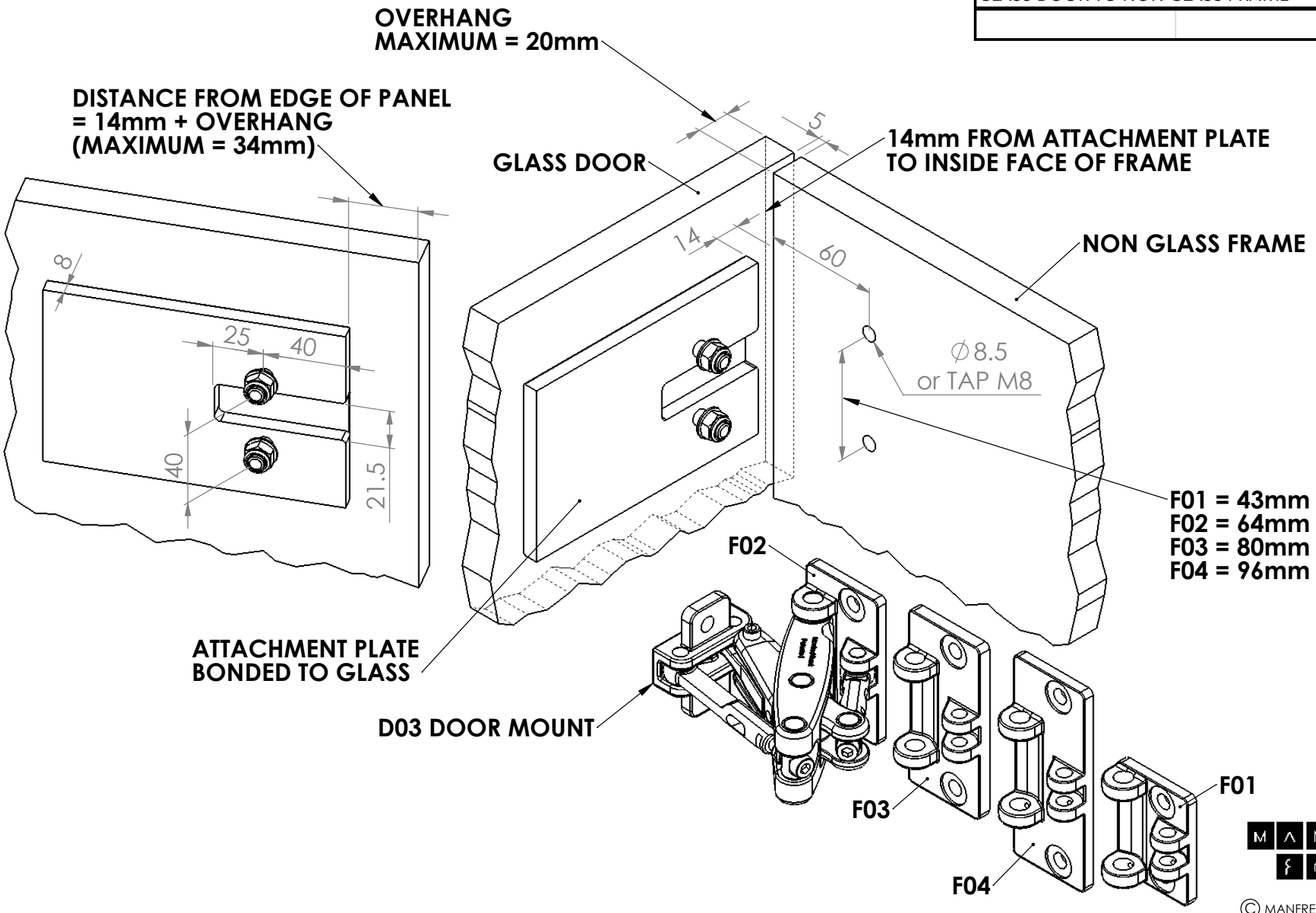

© MANFRED FRANK SYSTEMS LTD
ALL RIGHTS RESERVED